MODEL 41-RP-1, CODE 121

WIRELESS RECORD PLAYER

The **Model 41-RP-1** is a remote type record player which can be used in conjunction with any standard broadcast receiver to reproduce phonograph records.

After allowing sufficient time for tubes to warm up, place tone arm on record; this automatically starts motor.

Next go to your radio and tune to approximately 540 K. C. (54 on most dials), at which setting the phonograph signal will be picked up. Volume can be regulated by the radio receiver's volume control in the normal way.

At the end of the record, return the tone arm to rest position, which will automatically turn motor off. It is not necessary to slide "Off-On" Switch to the "Off" position between records.

If interference from broadcast stations is encountered the frequency of the unit can be changed to any other frequency between 530 K C. and 580 K. C. by adjusting the small screw indicated in Diagram "B." Turning screw clockwise lowers the frequency, counter-clockwise raises the frequency. **This adjustment is best made while the unit is in operation.**

If hum is experienced it may be necessary to reverse the power plug of the record player, the radio, or both. In most cases it is preferable to use different receptacles for record player and radio.

No definite rule can be established for the relative location of the record player to your radio; individual trial will establish best location. However, in general, satisfactory operation may be obtained up to a distance of fifty (50) feet, provided local noise conditions are not too severe.

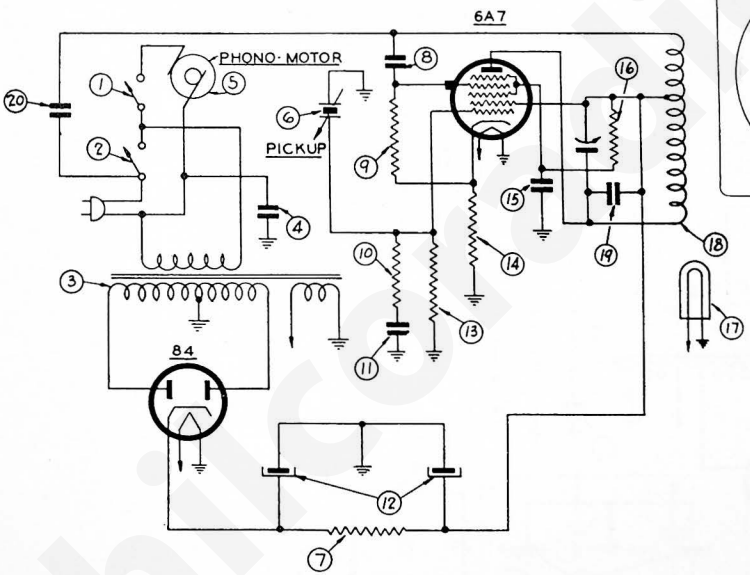

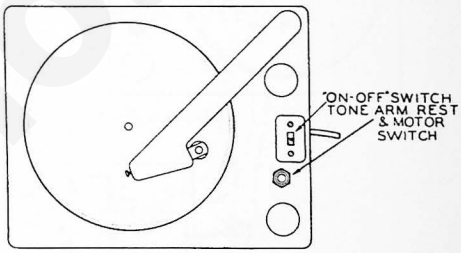

DIAGRAM A

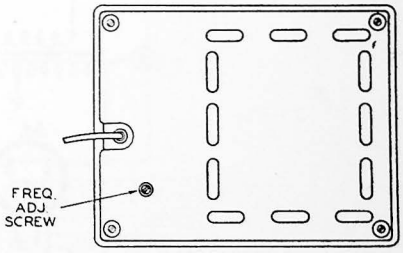

DIAGRAM B

Replacement Parts — Model 41-RP-1 Wireless Record Player

SCHEM. No.	DESCRIPTION	PART No.
1	Motor Switch	42-1557
2	Master Switch	42-1562
3	Power Transformer	32-8043
4	Line Condenser (.01 mf., 600 v.)	3903-SG
5	Motor (115 volts, 60 cycles)	35-1222
	Motor (115 volts, 50 cycles)	35-1250
6	Crystal Pickup and Tone Arm	35-2068
7	Filter Resistor (10,000 ohms, ½ watt)	33-310334
8	Oscillator Grid Cond. (100 mmf.)	60-110157
9	Oscillator Grid Resistor (100,000 ohms, ¼ watt)	33-410154
10	Comp. Resistor (47,000 ohms, ¼ watt)	33-347154
11	Comp. Condenser (.006 mf., 400 v.)	30-4591
12	Electrolytic Condenser (6 mf., 6 mf., 150 v.)	30-2388
13	Grid Resistor (1 meg., ¼ watt)	33-510154
14	Cathode Bias Resistor (1000 ohms, ¼ watt)	33-210154
15	Screen By-Pass (.1 mf., 400 v.)	30-4455
16	Screen Resistor (47,000 ohms, ¼ watt)	33-347154
17	Pilot Light (6-8 v., 250 amp.)	34-2064
18	Oscillator Coil and Padder Assembly	32-3218
19	Mica Condenser (250 mmf.)	60-125157
20	Coupling Condenser (30 mmf.)	60-030157

MISCELLANEOUS PARTS

SCHEM. No.	DESCRIPTION	PART No.
	Cabinet	10459A
	Bottom Cover	27-9326
	Screw (Chassis Mtg.)	W-218
	Screw (Motor Mtg.)	W-89
	Screw (Foot Mtg.)	W-2177
	Rubber Feet (Bottom of Cabinet)	27-4817
	Switch Plate	56-1383
	Screw	W-560
	Turntable (Motor)	35-3044